RADIALL	R404843000	TECHNICAL DATA SHEET

TITLE: 50 W 4GHZ TNC/fem COAXIAL TERMINATION **LTR.** B

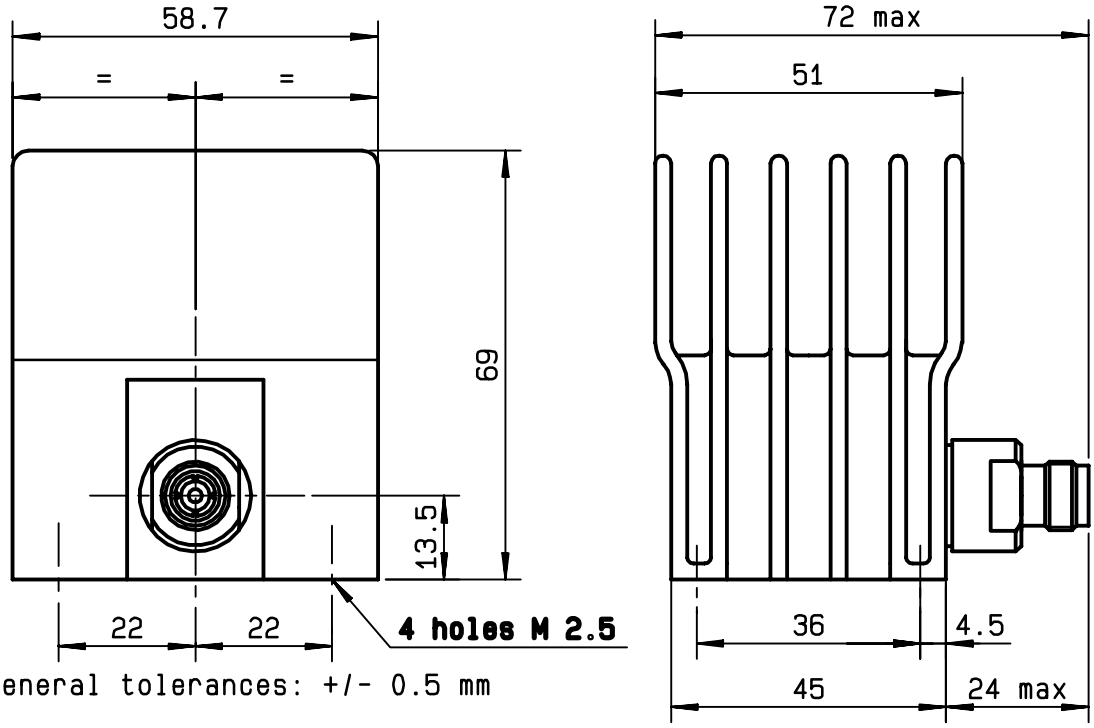

General tolerances: +/- 0.5 mm

ELECTRICAL CHARACTERISTICS

FREQUENCY RANGE	: DC - 4GHz
IMPEDANCE	: 50 Ohms
DC RESISTANCE	: 50 Ohms ± 5 %
AVERAGE POWER HANDLING	: 50 W at 25°C
PEAK POWER HANDLING	: 5 kW (1 µs, 1%.) at 25°C
V.S.W.R : DC - 2 GHz	: <= 1.10
2 - 4 GHz	: <= 1.20

MECHANICAL CHARACTERISTICS

CONNECTOR	: TNC female per MIL C 39012
MAXIMUM WEIGHT	: 320 grams

ENVIRONMENTAL CHARACTERISTICS

OPERATING TEMPERATURE RANGE (°C)	: -55 , +125
STORAGE TEMPERATURE RANGE (°C)	: -55 , +125

Power derating
Versus temperature

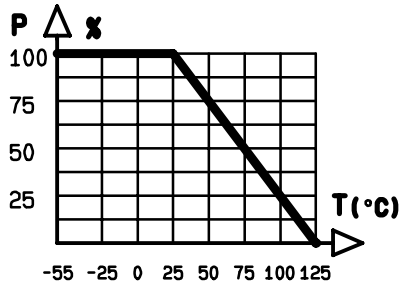

Tentative data subject to change without notice

PEN	QUALITY Dpt App.					
95182						
PAGE	DATE	NAME	B	New format	22.10.92	PG
1/1	24.04.91	KL	LTR	REVISIONS	DATE	APP.

RADIALL 101. Ph. Hoffmann - Z.I West - 93116 ROSNY/S/BOIS Cedex - FRANCE - Phone (33)(1) 49 35 35 35 - Tvx 335220F